Z™-45/25 & Z™-45/25J DC and Bi-Energy

Standard Features

- Over 51 ft (15.8 m) working height
- Over 24 ft (7.3 m) horizontal reach
- Up and over clearance of over 22 ft (6.7 m)
- 5 ft (1.52 m) turning radius
- 500 lb (227 kg) lift capacity
- Fully proportional controls
- Hydraulic platform rotation
- 24V DC auxiliary power unit
- Drive enable system
- End mount platform on Z-45/25J models
- AC wiring to platform
- Tilt alarm
- Horn
- Hour meter
- Industrial air tires

Options and Accessories

- Alarm package
- Platform swing gate
- Air line to platform
- Full rail platform pinch guard
- Platform work light
- Platform control box cover
- Foam filled and non-marking tire packages

Standards Compliance

- ANSI/SIA A92.5
- CSA CAN3-B354.4-M82
- CE compliance option
- AS 1418.10

Range of Motion

Z-45/25

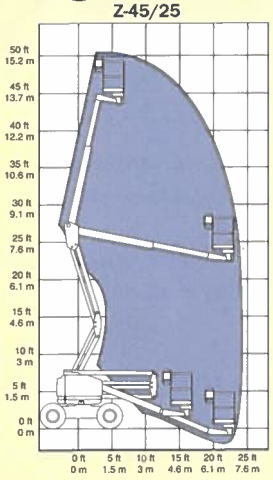

Z-45/25J

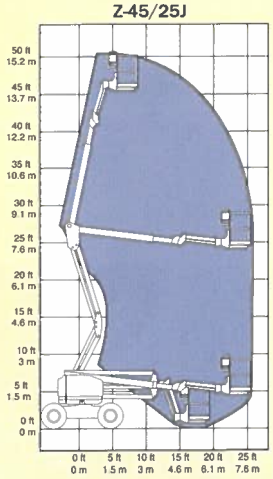

Z-45/25

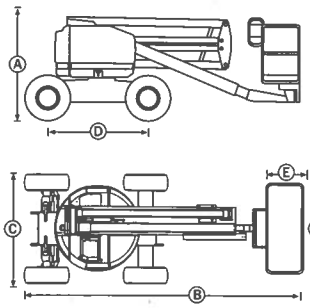

Z-45/25J

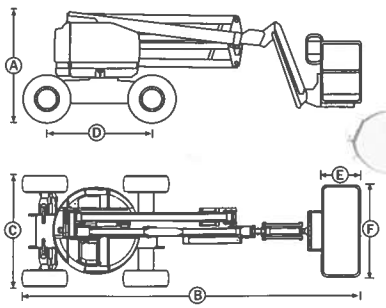

Specifications

Model	Z-45/25		Z-45/25J	
	US	Metric	US	Metric
Working height*	51 ft 5 in	15.8 m	51 ft 3 in	15.8 m
Platform height	45 ft 5 in	13.8 m	45 ft 3 in	13.8 m
(A) Height - stowed	6 ft 7 in	2 m	6 ft 7 in	2 m
(B) Length - stowed	18 ft	5.5 m	22 ft 3 in	6.8 m
(C) Width	5 ft 9 in	1.75 m	5 ft 9 in	1.75 m
(D) Wheelbase	6 ft 8 in	2.03 m	6 ft 8 in	2.03 m
Ground clearance - center	8½ in	22 cm	8½ in	22 cm
Ground clearance - min	7 in	18 cm	7 in	18 cm
(E) Platform length	30 in	76 cm	30 in	76 cm
(F) Platform width	72 in	1.83 m	72 in	1.83 m
Horizontal reach max	24 ft 6 in	7.5 m	25 ft 3 in	7.7 m
Up and over clearance	22 ft 6 in	6.9 m	22 ft 6 in	6.9 m
Lift capacity	500 lb	227 kg	500 lb	227 kg
Turning radius - inside	5 ft	1.52 m	5 ft	1.52 m
Turntable rotation	359° non-continuous		359° non-continuous	
Turntable tailswing	zero		zero	
Platform rotation	180°		160°	
Power source	48V DC (8 6V 315 AH batteries) or 48V DC with Kubota Diesel 12 hp (9 kw)			
Drive speed - stowed	3 mph	4.8 km/hr	3 mph	4.8 km/hr
Drive speed - raised	0.6 mph	1 km/hr	0.6 mph	1 km/hr
Lift speed to full height	90 sec		90 sec	
Controls	24V DC proportional		24V DC proportional	
Auxiliary power unit	24V DC		24V DC	
Tires	9 - 14.5		9 - 14.5	
Gradeability - stowed	30%		30%	
Hydraulic tank capacity	8 gal	30 litre	8 gal	30 litre
Fuel tank capacity	9 gal	34 litre	9 gal	34 litre
Weight - DC**	15,900 lb	7,214 kg	16,100 lb	7,305 kg
Weight - Bi-Energy**	16,100 lb	7,305 kg	16,300 lb	7,396 kg

* The metric equivalent of working height adds 2 m to platform height. U.S. adds 6 ft to platform height.
** Weight will vary depending on options and/or country standards.

Distributed By:

Genie Industries

GENIE UNITED STATES
18340 NE 76th Street
Post Office Box 97030
Redmond, Washington 98073-9730
Telephone **(425) 881-1800**
Toll Free in USA/Canada **800-536-1800**
Fax (425) 883-3475
http://www.genieindustries.com

GENIE UNITED KINGDOM
The Maltings, Wharf Road
Grantham
Lincolnshire NG31 6BH
England
Telephone: **+44 (0)1476 584333**
Fax: +44 (0)1476 584334
http://www.genieindustries.com

For further information, please contact your local distributor or the Genie sales office listed. Continuous improvement of our products is a Genie policy. Product specifications are subject to change without notice or obligation. The photographs and drawings in this brochure are for illustrative purposes only. Refer to appropriate "Genie Z-45/25 and Z-45/25J Operator's Manual" for instructions on the proper use of this equipment. Failure to follow the appropriate Operator's Manual when using a Genie Z-45/25 or Z-45/25J or to otherwise act irresponsibly, may result in serious injury or death. Copyright ©1998 by Genie Industries. Printed in the USA. "Genie" is a Registered Trademark of Genie Industries in the USA and many other countries. "Z" is a Registered